HISTORIC AND DESIGN REVIEW COMMISSION

January 19, 2022

HDRC CASE NO:	**2022-021**
ADDRESS:	526 RIVERWALK
LEGAL DESCRIPTION:	ROW at River Walk Level
ZONING:	D, H, RIO-3
CITY COUNCIL DIST.:	1
DISTRICT:	Alamo Plaza Historic District
LANDMARK:	Individual Landmark
APPLICANT:	Joseph Smith/JMS Architects
OWNER:	William Grinnan/THE RIVERSIDE BUILDING
TYPE OF WORK:	Awning within River Walk path
APPLICATION RECEIVED:	January 03, 2022
60-DAY REVIEW:	Not applicable due to City Council Emergency Orders
CASE MANAGER:	Edward Hall

REQUEST:

The applicant is requesting a Certificate of Appropriateness for approval to construct a steel awning structure in two locations within the public right of way at the River Walk level.

APPLICABLE CITATIONS:

Sec. 35-673. - Site Design Standards.

This section focuses on the design concepts for an individual site and helps create a cohesive design that recognizes the unique opportunities of developing a site near the river or creek. These include building placement, orientation and setbacks, and the design of the outdoor space.

(a) Solar Access. The intent of providing and maintaining solar access to the San Antonio River is to protect the river's specific ecoclimate. The river has a special microclimate of natural and planted vegetation that requires certain levels and balanced amounts of sunlight, space and water. Development must be designed to respect and protect those natural requirements, keeping them in balance and not crowding or altering them so that vegetation does not receive more or less space and water, but particularly sunlight, than is required for normal expected growth. Properties in RIO-7 are exempt from Solar Access requirements.

(1) Building Massing to Provide Solar Access to the River. Building massing shall be so designed as to provide direct sunlight to vegetation in the river channel as defined:

A. The area to be measured for solar access shall be a 30-foot setback from the river's edge or from the river's edge to the building face, which ever is lesser, parallel to the river for the length of the property.

B. The solar calculations shall be measured exclusive to the applicant's property; that is, shades and shadows of other buildings shall not be included in the calculations. The solar calculations shall only measure the impact of new construction and additions. The shading impact of historic buildings on the site may be excluded from the calculations.

C. The defined area shall receive a minimum of five and one-half (5.5) hours of direct sunlight, measured at the winter solstice, and seven and one-half (7.5) hours of direct sunlight, measured at the summer solstice.

D. Those properties located on the south side of the river (whose north face is adjacent to the river) shall only be required to measure the sunlight in the 30-foot setback on the opposite bank of the river.

E. Those properties within the river improvement overlay district not directly adjacent to the river are still subject to the provisions of this section with the exception of RIO-7. To determine the solar access effect of these buildings on the river the applicant must measure the nearest point to the river of an area defined by a 30-foot setback from the river's edge, parallel to the river for the length of their

property that would be affected by their building. For those buildings on the south side of the river, the 30-foot setback shall be measured only on the opposite bank.

F. However, in those cases where the above conditions cannot be met due to the natural configuration of the river, existing street patterns, or existing buildings, the HDRC may approve a buildings mass and height as allowed by Table 674-2.

G. If there is a conflict with this section and another section of this chapter this section shall prevail.

(2) Prohibition of Structures, Buildings, Roofs or Skywalks Over the River or Creek Channel. No structure, building, roof or skywalk may be constructed over the river or creek channel, or by-pass channel with the exception of structures for flood control purposes, open air pedestrian bridges at ground or river level, and street bridges. The river channel is the natural course of the river as modified for flood control purposes and the Pershing-Catalpa ditch. The creek channel is the natural course of San Pedro Creek as modified for flood control purposes between the flood control tunnel Inlet at I-35 to the confluence with Apache Creek.

(b) Building Orientation. Buildings should be sited to help define active spaces for area users, provide pedestrian connections between sites, help animate the street scene and define street edges. Consideration to both the street and river or creek side should be given. The placement of a building on a site should therefore be considered within the context of the block, as well as how the structure will support the broader design goals for the area.

(1) Two (2) or More Buildings on a Site.

A. Cluster buildings to create active open spaces such as courtyards along the street and river or creek edges. Site plazas and courtyards, if possible, so that they are shaded in the summer and are sunny in the winter.

(2) Primary and Secondary Entrances (see Figure 673-1).

A. Orient a building's primary entrance toward the street with subordinate entrances located on the river or creek side and/or the interior of the property. On a major thoroughfare street it is acceptable to provide the primary entrance through a common courtyard and then to a street.

B. The primary entrance shall be distinguished by architectural features such as, but not limited to: an entry portal; change in material or color; change in scale of other openings; addition of columns, lintels or canopies.

C. Secondary entrances shall have architectural features that are subordinate to the primary entrance in scale and detail. For purposes of this division subordinate means that the entrance is smaller in height and width, and has fewer or simpler architectural elements.

(c) Topography and Drainage. The natural contours of occasional hillsides and river or creek banks contribute to the distinct character of the San Antonio River and San Pedro Creek and shall be considered in site designs for new development. Site plans shall minimize the need for cut and fill. It should be considered as an opportunity for positive enhancements through the creative use of terraces and retaining walls. Sites abutting the creek must comply with subsection 35-673(c)(8) San Antonio River Authority Consultation.

(1) Visual Impacts of Cut and Fill. Divide a grade change of more than ten (10) vertical feet into a series of benches and terraces. Terrace steep slopes following site contours. When creating site benches, using sloped "transitional areas" as part of the required landscaping is appropriate.

(2) Minimize the Potential for Erosion at the Riverbank or Creekbank. Grade slopes at a stable angle not to exceed four to one (4:1) and provide plant material that will stabilize the soil such as vigorous ground covers, vines or turf planting that are native and noninvasive species as found on the permissible plant list maintained by the parks and recreation department. Use of stabilizing materials such as geo-web or geo-grid is permitted as long as plant material is used to conceal the grid.

Use of terraced walls is permitted when there is a slope of more than four to one (4:1).

(3) Retaining Walls. Limit the height of a retaining wall to less than six (6) feet. If the retaining wall must exceed six (6) feet, a series of six-foot terrace walls is acceptable. Walls at dams, water detention gates, and locks are excluded from this requirement. If in the opinion of the historic preservation officer a higher wall is consistent with the adopted conceptual plans of the river and creek, a higher wall (not to exceed

twelve (12) feet) is allowed. Materials used for the walls may include limestone, stucco, brick, clay, tile, timber, or textured concrete. In RIO-7, new retaining walls should use similar material of nearby existing retaining or channel walls but should not imitate historic walls. Contemporary craft and building techniques should be used. Materials used for the walls may include limestone, concrete, or bio-engineered vegetative walls. (see Figure 673-2)

(4) Enhance or Incorporate Acequias Into The Landscape Design and Drainage Scheme of the Site. Where archeological evidence indicates a site contains or has contained a Spanish colonial acequia, incorporate the original path of the acequia as a natural drainageway or a landscape feature of the site by including it as part of the open space plan, and a feature of the landscape design.

(5) Design of Stormwater Management Facilities to be a Landscape Amenity. Where above ground stormwater management facilities are required, such facilities shall be multi-purpose amenities. For example, water quality features can be included as part of the site landscaping and detention facilities can be included as part of a hardscape patio. Using an open concrete basin as a detention pond is prohibited (see Figure 673-3).

(6) Walls and Fences at Detention Areas.

A. When the topography of the site exceeds a four to one (4:1) slope and it becomes necessary to use a masonry wall as part of the detention area, use a textured surface and incorporate plant materials, from the plant list maintained by the parks department, that will drape over the edge to soften the appearance of the structure.

B. The use of solid board or chain link fence with or without slats is prohibited. A welded wire, tubular steel, wrought iron or garden loop is permitted.

(7) Roof Drainage into the River and Creek.

A. All roof drainage and other run-off drainage shall conform to the Transportation and Capital Improvements department standards so that they drain into sewer and storm drains rather than by overland flow. Drainage of this type shall not be piped into the river or creek unless the outlet is below the normal waterline of the river at normal flow rates.

B. All downspouts or gutters draining water from roofs or parapets shall be extended underground under walks and patios to the San Antonio River or San Pedro Creek edge or stormwater detention facility so that such drainage will not erode or otherwise damage the public path, landscaping, creek or river retaining walls.

C. All piping and air-conditioning wastewater systems shall be kept in good repair. Water to be drained purposely from these systems, after being tested and adjudged free from pollution, shall be drained in the same manner prescribed in subsection (7)A. above.

(8) San Antonio River Authority Consultation. Consultation with the San Antonio River Authority regarding direct access adjacent to the San Antonio River and San Pedro Creek within RIO-1, RIO-2, RIO-4, RIO-5, RIO-6, and RIO-7, landscaping and maintenance boundaries, and storm water control measures as required in Sections 35-672, 35-673, and 35-678, as applicable, is required prior to a submission for a certificate of appropriateness from the Office of Historic Preservation or plat approval, as applicable, to allow for review and comment by SARA for properties that fall within the RIO Overlay District as defined in UDC 35-338. This section shall apply to newly developed properties and redevelopment of properties.

A. Access to the San Antonio River within RIO-1, RIO-2, RIO-4, RIO-5, RIO-6, and RIO-7 shall comply with the following:

i. All tie in points shall provide plans sufficient to show materials and grading for review by SARA;

ii. Removal of existing park trail hardscape shall require SARA approval;

iii. Development shall make it clear for users of the park to discern public access points from private access points;

iv. If during construction the park trail must be temporarily closed, an alternative engineered route shall be identified and temporary signage in accordance with the Manual on Uniform Traffic Control Devices (MUTCD) provided and maintained for the duration of the project;

v. Acceptance of park trail access point(s) shall be the responsibility of SARA.

B. Landscaping and maintenance boundaries are defined in accordance with a final maintenance agreement (the "Maintenance Agreement") entered into between the developer and SARA, which may occur independently from HDRC review. The maintenance agreement will set out the respective rights and responsibilities of the parties. The purpose of the maintenance agreement is to protect the public investment that has been made in the RIO districts and to ensure public use of the public resources. The maintenance agreement will be designed to maintain and enhance the aesthetics of the property and the function of the hydrology in keeping with the design objectives provided in section 35-670 of this chapter and shall generally conform to best management practices as documented in Appendix E Recommended Plant List and section 35-210 of this chapter.

C. Developments shall manage site storm water through LID components consistent with section 35-210 of this chapter and shall also comply with the following:

i. Storm water runoff shall pass to the river through discharge pipes or outfalls that are below water level or through an approved LID feature. Overland flow onto the park is discouraged and shall be reviewed on a case-by-case basis. Modification of this subsection shall require approval by SARA and the director of transportation and capital improvements, or their designee;

ii. Open concrete chutes shall be prohibited;

iii. Runoff from pools or other non-storm water producing sources shall be treated prior to discharging into the river or creek.

(d) Riverside and Creekside Setbacks. Riverside and creekside setbacks for both buildings and accessory structures are established to reinforce the defined character of the specific river improvement overlay district and help to define an edge at the river pathway that is varied according to the relationship of the river, creek, and the street. In the more urban areas, buildings should align closer to the river or creek edge, while in more rural areas the buildings should be set farther away.

(1) Minimum setback requirements are per the following Table 673-1a and 673-1b.

[*] Along the creek, the setback will be measured from the San Pedro Creek Improvements Project (SPCIP) property line or easement.

[**] Along the creek, in instances where a High Bank Paseo is only located on one side of the creek right-of-way, the opposite side shall have a 15-foot setback to allow for a shared passageway. The historic preservation officer may reduce the required setback for properties to no less than eight (8) feet for lots less than one hundred (100) feet in depth or on lots with a total area of less than five thousand (5,000) square feet.

(2) Designation of a development node district provides for a minimum riverside setback of zero (0) feet.

(e) Landscape Design. Lush and varied landscapes are part of the tradition of the San Antonio River and San Pedro Creek. These design standards apply to landscaping within an individual site. Additional standards follow that provide more specific standards for the public pathway along the river or creek and street edges.

(1) Provide Variety in Landscape Design. Provide variety in the landscape experience along the river or creek by varying landscape designs between properties. No more than seventy-five (75) percent of the landscape materials, including plants, shall be the same as those on adjacent properties (see Figure 673-4).

(2) Planting Requirements in Open Space Abutting the River or Creek. On publicly-owned land leased by the adjoining property owner, if applicable, and/or within privately owned setbacks adjacent to the river or creek, a minimum percentage of the open space, excluding building footprint, lease space under bridges and parking requirements, are required to be planted according to Table 673-2.

A. Planting requirements in RIO-4, RIO-5, RIO-6, and RIO-7e should continue the restoration landscape efforts along the river or creek banks. Planting in these RIO districts is to be less formal so as to maintain the rural setting of the river.

B. In "RIO-3," if existing conditions don't meet the standards as set out in Table 673-2, the owner or lessee will not have to remove paving to add landscaping in order to meet the standards until there is a substantial remodeling of the outdoor area. Substantial remodeling will include replacement of seventy-five (75) percent of the paving materials, or replacement of balcony and stair structures.

(f) Plant Materials. A number of soil conditions converge in the San Antonio and San Pedro Creek area to create unique vegetation ecosystems. Soil conditions vary greatly along these waterways and therefore native and indigenous plants will vary accordingly. Landscaping should reflect the unique soil characteristics of the specific site.

(1) Incorporate Existing Native Vegetation. Extend the use of native landscape materials, including plants, shrubs and trees that are used in the public areas of the river or creek onto adjacent private areas to form a cohesive design.

(2) Use indigenous and noninvasive species characteristic of the specific site as found on the permissible plant list maintained by the parks and recreation department or the Unified Development Code Plant List found in Appendix E.

In "RIO-3," plantings of tropical and semi-tropical plants with perennial background is permitted.

(3) Install Trees to Provide Shade and to Separate Pedestrians From Automobile Traffic. Install street trees along the property line or in the ROW abutting all streets according to minimum requirement standards established in subsection 35-512(b), except where this conflicts with existing downtown Tri-Party improvements in "RIO-3." In "RIO-3" the owner has the option of placing trees at the property line, or along the street edge.

(g) Paving Materials. An important San Antonio landscape tradition is the use of decorative surfaces for paving and other landscape structures. Paving materials and patterns should be carefully chosen to preserve and enhance the pedestrian experience.

(1) Vary Walkway, Patio and Courtyard Paving to Add Visual Interest on the River or Creekside of Properties Abutting the River or Creek. Pervious paving is encouraged where feasible and appropriate to the site.

A. A maximum of six hundred (600) square feet is allowed for a single paving material before the paving material must be divided or separated with a paving material that is different in texture, pattern, color or material. A separation using a different material must be a minimum of twenty-four (24) inches wide, the full width of the pathway.

B. A maximum of one hundred (100) lineal feet is allowed in a walkway before the pattern must change in districts "RIO-2," "RIO-3," and "RIO-4." A maximum of five hundred twenty-eight (528) lineal feet is allowed before the pattern must change in districts "RIO-1," "RIO-5" and "RIO-6." The change of material at five hundred twenty-eight (528) lineal feet will define and delineate one-tenth-mile markers.

C. In "RIO-3," the Riverwalk pathway shall be delineated by using a separate material that is clearly distinguished from the adjacent patio paving materials. If the historic Hugman drawings indicate a sidewalk width and pattern on the site, that paving pattern and material shall be replicated.

D. In RIO-7 paseos, terraces, courtyards, and patios that connect to the High Bank Paseo are encouraged to match the public pathway paving material, color, or pattern to form a more seamless connection between public pathway and on-site open spaces.

(h) Site Walls and Fences. Site walls and fences are used to help divide spaces, screen unsightly objects and provide privacy. However, the character of the San Antonio River and San Pedro Creek is such that walls shall not be erected in such a way as to block views of the river or creek from public spaces.

(1) Use of Site Walls to Define Outdoor Spaces.

A. Use of low scale walls (twenty-four (24) inches to forty-eight (48) inches) to divide space, create a variety in landscaping and define edges is permitted.

B. Solid walls (up to seventy-two (72) inches) are permitted to: screen mechanical equipment, garbage receptacles and other unsightly areas; and provide privacy at the back of lots up to the front building face.

(2) Site Wall and Fence Materials.

A. On properties abutting the river or creek, site walls and fence materials may be constructed of: stone, block, tile, stucco, wrought iron, tubular steel, welded wire or a combination of masonry and metal, cedar posts and welded wire or garden loop or other materials having similar characteristics. All other properties, not abutting the river or creek may use the above listed materials plus wood fencing.

B. All chain link fences are prohibited for properties abutting the river or creek. For properties that do not abut the river or creek chain link is only allowed in the rear yard if not readily visible from the right-of-way. Barbed wire, razor wire, and concertina are prohibited in all RIO districts.

(i) Street Furnishings. Street furnishings are exterior amenities, including but not limited to, tables, chairs, umbrellas, landscape pots, wait stations, valet stations, bicycle racks, planters, benches, bus shelters, kiosks, waste receptacles and similar items that help to define pedestrian use areas. Handcrafted street furnishings are particularly important in San Antonio, and therefore this tradition of craftsmanship and of providing street furniture is encouraged.

(1) Prohibited Street Furnishings in Riverwalk Area and San Pedro Creek Improvements Project. The following street furnishings are prohibited within the publicly owned portion of the River Walk area and SPCIP, whether or not the property is leased, and on the exterior of the river or creekside of buildings directly adjacent to the publicly owned portion of the river or creek:

A. Vending machines.

B. Automatic teller machines.

C. Pay phones.

D. Photo booths.

E. Automated machines such as, but not limited to, penny crunching machines, blood pressure machines, fortune-telling machines, video games, animated characters and other machines that are internally illuminated, or have moving parts, or make noise, or have flashing lights.

F. Inanimate figures such as horses, kangaroos, bears, gorillas, mannequins or any such animal, cartoon or human figure. This section does not affect public art as defined in Appendix "A" of this chapter.

G. Monitors (i.e., television screens, computer screens, digital displays, and video boards) except those permitted as part of a performing arts center digital display monitor pursuant to a specific use authorization.

H. Speakers, except those permitted as part of a performing arts center digital display monitor pursuant to a specific use authorization.

(2) Street Furnishing Materials.

A. Street furnishings shall be made of wood, metal, stone, terra cotta, cast stone, hand-sculpted concrete, or solid surfacing material, such as Corian or Surell.

B. Inexpensive plastic resin furnishings are prohibited.

(3) Advertising on Street Furnishings.

A. No commercial logos, trademarks, decals, product names whether specific or generic, or names of businesses and organizations shall be allowed on street furnishings.

B. Product or business advertising is prohibited on all street furnishings.

C. Notwithstanding the restrictions above, applications may be approved for purposes of donor or non-profit recognition.

(4) Street furnishings, such as tables and chairs may not be stored (other than overnight storage) in such a way as to be visible from the river or creek pathway.

(j) Lighting. Site lighting should be considered an integral element of the landscape design of a property. It should help define activity areas and provide interest at night. At the same time, lighting should facilitate safe and convenient circulation for pedestrians, bicyclists and motorists. Overspill of light and light pollution should be avoided.

(1) Site Lighting. Site lighting shall be shielded by permanent attachments to light fixtures so that the light sources are not visible from a public way and any offsite glare is prevented.

A. Site lighting shall include illumination of parking areas, buildings, pedestrian routes, dining areas, design features and public ways.

B. Outdoor spaces adjoining and visible from the river or creek right-of-way shall have average ambient light levels of between one (1) and three (3) foot-candles with a minimum of one-half (0.5) foot-candles and a maximum of six (6) foot-candles at any point measured on the ground plane. Interior spaces visible from the river or creek right-of-way on the river or creek level and ground floor level shall use light sources with no more than the equivalent lumens of a 100-watt incandescent bulb. Exterior balconies, porches and canopies adjoining and visible from the river or creek right-of-way shall use light sources with the equivalent lumens of a 60-watt incandescent bulb with average ambient light levels no greater than the lumen out put of a 100-watt incandescent light bulb as long as average foot candle standards are not exceeded. Accent lighting of landscape or building features including specimen plants, gates, entries, water features, art work, stairs, and ramps may exceed these standards by a multiple of two and one-half (2.5). Recreational fields and activity areas that require higher light levels shall be screened from the river or creek hike and bike pathways with a landscape buffer.

C. Exterior light fixtures that use the equivalent of more than 100-watt incandescent bulbs shall not emit a significant amount of the fixture's total output above a vertical cut-off angle of ninety (90) degrees. Any structural part of the fixture providing this cut-off angle must be permanently affixed.

D. Lighting spillover to the publicly owned areas of the river or creek or across property lines shall not exceed one-half (½) of one (1) foot-candle measured at any point ten (10) feet beyond the property line.

(2) Provide Lighting for Pedestrian Ways That is Low Scaled for Walking. The position of a lamp in a pedestrian-way light shall not exceed fifteen (15) feet in height above the ground.

(3) Light Temperature and Color.

A. Light temperature and color shall be between 2500°K and 3500°K with a color rendition index (CRI) of eighty (80) or higher, respectively. This restriction is limited to all outdoor spaces adjoining and visible from the river right-of-way and from the interior spaces adjoining the river right-of-way on the river level and ground floor level. Levels shall be determined by product specifications.

B. Unique lighting methods, including LED or colored lights, are allowed in RIO-7 in order to enhance architectural elements provided such lighting installations to not conflict with any other requirement in this section.

(4) Minimize the Visual Impacts of Exterior Building Lighting.

A. All security lighting shall be shielded so that the light sources are not visible from a public way.

B. Lighting (uplighting and downlighting) that is positioned to highlight a building or outdoor artwork shall be aimed at the object to be illuminated, not pointed into the sky.

C. Fixtures shall not distract from, or obscure important architectural features of the building. Lighting fixtures shall be a subordinate feature on the building unless they are incorporated into the over-all design scheme of the building.

(5) Prohibited Lighting on the Riverside or Creekside of Properties Abutting the River or Creek.

A. Flashing lights.

B. Rotating lights.

C. Chaser lights.

D. Exposed neon.

E. Seasonal decorating lights such as festoon, string or rope lights, except between November 20 and January 10.

F. Flood lamps.

(6) Minimize the visual impacts of lighting in parking areas in order to enhance the perception of the nighttime sky and to prevent glare onto adjacent properties. Parking lot light poles are limited to thirty (30) feet in height, shall have a 90° cutoff angle so as to not emit light above the horizontal plane.

(k) Curbs and Gutters.

(1) Construct Curb and Gutter Along the Street Edge of a Property.

A. Install curbs and gutter along the street edge at the time of improving a parcel.

B. In order to preserve the rural character of RIO-5 and RIO-6, the HPO in coordination with public works and the development services department may waive the requirement of curbs and gutters.

(l) Buffering and Screening. The manner in which screening and buffering elements are designed on a site greatly affects the character of the river districts. In general, service areas shall be screened or buffered. "Buffers" are considered to be landscaped berms, planters or planting beds; whereas, more solid "screens" include fences and walls. When site development creates an unavoidable negative visual impact on abutting properties or to the public right-of-way, it shall be mitigated with a landscape design that will buffer or screen it.

(1) Landscape Buffers Shall be Used in the Following Circumstances: To buffer the edges of a parking lot from pedestrian ways and outdoor use areas, (such as patios, and courtyards), and as an option to screening in order to buffer service areas, garbage disposal areas, mechanical equipment, storage areas, maintenance yards, equipment storage areas and other similar activities that by their nature create unsightly views from pedestrian ways, streets, public ROWs and adjoining property.

(2) Screening Elements Shall be Used in the Following Circumstances: To screen service areas, storage areas, or garbage areas from pedestrian ways.

(3) Exceptions for Site Constraints. Due to site constraints, in all RIOs and specifically for "RIO-3" where there is less than ten (10) feet to provide for the minimum landscape berm, a screen may be used in conjunction with plantings to meet the intent of these standards. For example a low site wall may be combined with plant materials to create a buffer with a lesser cross sectional width (see Figure 673-8).

(4) Applicable Bufferyard Types. Table 510-2 establishes minimum plant materials required for each bufferyard type. For purposes of this section, type C shall be the acceptable minimum type.

(5) Applicable Screening Fence and Wall Types. Screening fences and walls shall be subject to conditions of subsection 35-673(h), Walls and Fences.

(m) Service Areas and Mechanical Equipment. Service areas and mechanical equipment should be visually unobtrusive and should be integrated with the design of the site and building. Noise generated from mechanical equipment shall not exceed city noise regulations.

(1) Locate service entrances, waste disposal areas and other similar uses adjacent to service lanes and away from major streets and the river or creek.

A. Position utility boxes so that they cannot be seen from the public Riverwalk or San Pedro Creek path, or from major streets, by locating them on the sides of buildings and away from pedestrian and vehicular routes. Locating them within interior building corners, at building offsets or other similar locations where the building mass acts as a shield from public view is preferred.

B. Orient the door to a trash enclosure to face away from the street when feasible.

C. Air intake and exhaust systems, or other mechanical equipment that generates noise, smoke or odors, shall not be located at the pedestrian level.

(2) Screening of service entrance shall be compatible with the buildings on the block face.

A. When it would be visible from a public way, a service area shall be visually compatible with the buildings on the block face.

B. A wall will be considered compatible if it uses the same material as other buildings on the block, or is painted a neutral color such as beige, gray or dark green or if it is in keeping with the color scheme of the adjacent building.

(n) Bicycle Parking. On-site bicycle parking helps promote a long term sustainable strategy for development in RIO districts. Bicycle parking shall be placed in a well lit and accessible area. UDC bicycle parking requirements in UDC 35-526 can be met through indoor bicycle storage facilities in lieu of outdoor bike rack fixtures.

(o) Access to Public Pathway Along the River. These requirements are specifically for those properties adjacent to the river to provide a connection to the publicly owned pathway along the river in RIOs 1 through 6. The connections are to stimulate and enhance urban activity, provide path connections in an urban context, enliven street activity, and protect the ambiance and character of the river area.

(1) A stair, ramp or elevator connecting the publicly owned pathway at the river to private property along the river is allowed by right at the following locations:

A. At all street and vehicular bridge crossings over the river.

B. Where publicly owned streets dead end into the river.

C. Where the pedestrian pathway in the Riverwalk area is located at the top of bank and there is a two-foot or less grade change between the private property and the pathway.

(2) If there is a grade change greater than two (2) feet between the private property and the publicly owned pathway at the river then the following conditions apply:

A. Access to the publicly owned pathway is limited to one (1) connection per property, with the exception that connections are always allowed at street and vehicular bridge crossings. For example if one (1) property extends the entire block face from street crossing to street crossing the owner would be allowed three (3) access points if the distance requirements were met.

B. The minimum distance between access points shall be ninety-five (95) feet. Only street and vehicular bridge connections are exempted. Mid-block access points must meet this requirement.

C. Reciprocal access agreements between property owners are permitted.

(3) Clearly define a key pedestrian gateway into the site from the publicly owned pathway at the river or creek with distinctive architectural or landscape elements.

A. The primary gateway from a development to the publicly owned pathway at the river shall be defined by an architectural or landscape element made of stone, brick, tile, metal, rough hewn cedar or hand-formed concrete or through the use of distinctive plantings or planting beds.

(p) Access to the Public Pathway Along the Creek (RIO-7). These requirements are specifically for those properties adjacent to the creek to provide a connection to the publicly owned pathway along the creek. The connections are to stimulate and enhance urban activity, provide path connections in an urban context, enliven street activity, and protect the ambiance and character of the creek area.

(1) Connections from private property to the publically owned pathway must maintain the functionality of publically installed Low Impact Development features like bioswales.

(2) At the High Bank Paseo a connection is allowed where there is a grade change of less than two (2) feet.

(3) Where bio-swales separate the publicly owned pathway from private property, the maximum length of a connection between the pathway and private property is twelve (12) feet.

(4) For properties abutting the creek along the Low Bank Paseo, a publicly accessible path should be built at street level along the creek.

A. The path may be a walkway, a series of connected patios or terraces, arcade, canopied walkway, or other connected open spaces provided access from one street-creek intersection to the next street-creek intersection.

B. Pathways may be paved with hard-surfaces like concrete, masonry pavers, store, or compacted material like decomposed granite, gravel, or cement-stabilized-dirt. Paving should be appropriate to the context of the site and use of the path.

C. Subject to approvals of San Antonio River Authority and City, the path may connect to the high bank paseo on the opposite bank via a pedestrian bridge. Locating pedestrian bridges at building paseos is encouraged. Pedestrian bridges must be a minimum of two hundred seventy (270) feet apart.

D. A stair, ramp or elevator connecting the publicly owned Low Bank Paseo to a publicly accessible path or, when the grade change is more than two (2) feet, the High Bank Paseo to an On-site Open Space is allowed when approved by the San Antonio River Authority. Stairs, ramps, and elevators must be installed outside of the SPCIP right-of-way or easement on private property.

(q) On-site Open Space. San Pedro Creek offers a unique opportunity to create privately owned, publicly-accessible spaces along the creek. These spaces expand the park space, provide additional connections to the adjacent neighborhoods, mark the intersection of the creek with the surrounding streets, and create additional amenities enhance the creek experience. One or more of the following must be incorporated into a site design pursuant to Table 673-3.

A. Forecourt— An open space that is part of the building's creek-side entrance. A forecourt shapes the ground floor plan into a 'U' shape. The length along the creek of a forecourts should be at least thirty (30) percent of the length of the building. Forecourts should be at least fifty (50) percent deep as their creek-side length.

B. Courtyard— An outdoor space primarily surrounded by a building. Courtyards may be gated but must be visible from the creek through a gate, vision panel, or open-air corridor. Courtyards that are not visible from the creek are allowed but do not count as a mandatory On-Site Open Space.

C. Mid-Block Paseos— See Downtown Design Guidelines, chapter 6, paragraph 2.

i. Connect from a public street to another public street, public alley or San Pedro Creek.

ii. Be at least fifteen (15) feet wide and should be located in the middle one-third (⅓) of a block.

iii. Be open to the public during normal business hours.

iv. Have a clear line of site from the street to the creek or other street.

v. Be at least fifty (50) percent open to the sky or covered with a transparent material. Connected courtyards and forecourts maybe used as part of this calculation

vi. Be lined with some ground floor spaced designed for retail, restaurant, office, or cultural institution uses for at least twenty-five (25) percent of its frontage.

vii. Include at least one gathering place with a fountain or other focal element.

viii. Add effective lighting to enhance visibility and safety.

D. Arcade— A covered pedestrian passage-way defined by a building wall on one-side and columns or arches on the remaining sides.

E. Canopy— A covered pedestrian passage-way defined by a building wall on one-side and open on the remaining sides. Canopies may encroach into creek-side setbacks.

F. Pedestrian Oriented Mid-Block Service Drives and Fire Lanes— Mid-block driveways providing access to parking garages, loading docks, and other service areas or fire lanes required to meet life safety requirements may be required in some development patterns. Where service drives or required fire lanes are visible from the creek, the following landscape features are required:

i. A pedestrian path with a clear walking path of six (6) feet is provided.

ii. The sidewalk connects the creek to a street or connects two (2) parallel streets.

iii. Both sides of the service drive are planted with street trees no more than forty-five feet (45'-0") on-center. Trees may be medium height tree but allow for un-obstructed headroom along the sidewalk.

iv. Street trees not protected by a curb must be protected from traffic with bollards, low walls, or other landscape features.

v. The view from the sidewalk to dumpsters, service yards, and transformers, and other service and utility areas are screened with a six-foot (6'-0") high wall or landscape buffer.

vi. Parallel parking spaces may be provided along the service drive but are not required.

vii. Where mid-block service drives or fire lanes are not visible from the creek, connecting them to the creek with a paseo is encouraged but the service drive must have an eight-foot wide, tree lined sidewalk continuing the pedestrian path of the paseo.

G. Creek and Street Intersection. The intersection of the creek with cross streets is a unique opportunity to provide access to the creek, improve pedestrian access and movement, mark the creek's location in the surrounding neighborhood, expand open space, and the amenity provided by the park.

i. Provide a publicly accessible open space of at least six hundred twenty-five (625) square feet at street-creek intersections.

ii. Provide a hardscape connection to paseos that are no lower than two (2) feet vertically at street intersections. The minimum dimension of this hardscape intersection is twelve (12) feet by twelve (12) feet.

iii. Create a distinctive architectural element such as a tower, change in fenestration, building entrance, multi-level porch, or deep arcade to mark the location of the creek-street intersection.

(r) RIO-7 Mid-Block Crosswalks and Mid-Block Paseos or Mid-Block Pedestrian Paths are required to provide pedestrian connections from the commercial streets on either side of the creek to the creek in blocks over five hundred fifty (550) [feet] long. New streets or publicly accessible drives and pedestrian paths may be used to meet this requirement.

(1) Mid-block crosswalks should be provided on all blocks five hundred fifty (550) feet or longer subject to approval by San Antonio Public Works and or Texas Department of Transportation (TxDOT) if State ROW.

(2) Mid-Block Paseos or other mid-block pedestrian access paths should be provided in all blocks five hundred fifty (550) feet or longer adjacent to the creek. Mid-block paseos or paths should connect the creek to mid-block crosswalks, streets that dead-end into the creek, nearby civic buildings, parks, cultural or historic sites as listed in subsection 35-670(b)(4)G, Design Objectives for RIO-7. Alternate path alignments may be allowed by the historic preservation officer if the alternate path meets the goals of subsection 35-670(b)(4)G, Design Objectives for RIO-7.

(s) New Elevator and Building Access. In order to prevent queuing and inhibition of pedestrian flow on the Riverwalk pathway, a landing that is at minimum six (6) feet in depth shall be provided between an elevator or building access point or doorway and the Riverwalk pathway. The width of the landing shall further comply with ADA (Americans with Disabilities Act) and/or TAS (Texas Accessibility Standards) requirements.

FINDINGS:

a. The applicant is requesting a Certificate of Appropriateness for approval to construct a steel awning structure in two locations within the public right of way at the River Walk level.
b. EXISTING SITE CONDITIONS – The existing site features an existing canopy structure, square tube railing and an existing, round tube railing. Paving exists in the form of exposed aggregate concrete, exposed aggregate concrete with brick, and flagstone paving border at the edge of the River Walk path and river.
c. CONCEPTUAL APPROVAL – The applicant received conceptual approval at the September 15, 2021, Historic and Design Review Commission hearing with the following stipulations:
   i. That the applicant incorporate a lighter frame that reads visually as a site furnishing rather than a permanent shade structure.

ii. That the new pavement match the exposed aggregate pavement found consistently in the vicinity and that the existing, flagstone edging be retained.

d. COORDINATION – The applicant has provided a letter from Center City Development and Operations Department noting coordination with CCDO regarding the proposed scope of work within the public right of way.

e. CANOPY STRUCTURE – The applicant has proposed to construct a steel awning structure in two locations within the public right of way at the River Walk level. Generally, staff finds that the proposed awning structure reads as a lightweight canopy and site furnishing elements that is appropriate. Since conceptual approval, the applicant has reduced the proposed massing and profile of the structure.

f. PAVEMENT – The applicant has proposed to remove existing pavement as part of the removal of the existing canopy structures and the installation of the proposed canopy structures. The applicant has noted that the existing, flagstone edging will be retained and that all new pavement will match the existing pavement, which features an exposed aggregate finish. Staff finds this to be appropriate and consistent with the UDC.

RECOMMENDATION:

Staff recommends approval based on findings a through f with the following stipulations:

i. That the applicant ensure that all required coordination with COSA is completed for work within the public right of way.

ii. That the proposed awnings do not feature signage.

City of San Antonio One Stop

September 10, 2021

1:500

0 0.004 0.008 0.016 mi

0 0.005 0.01 0.02 km

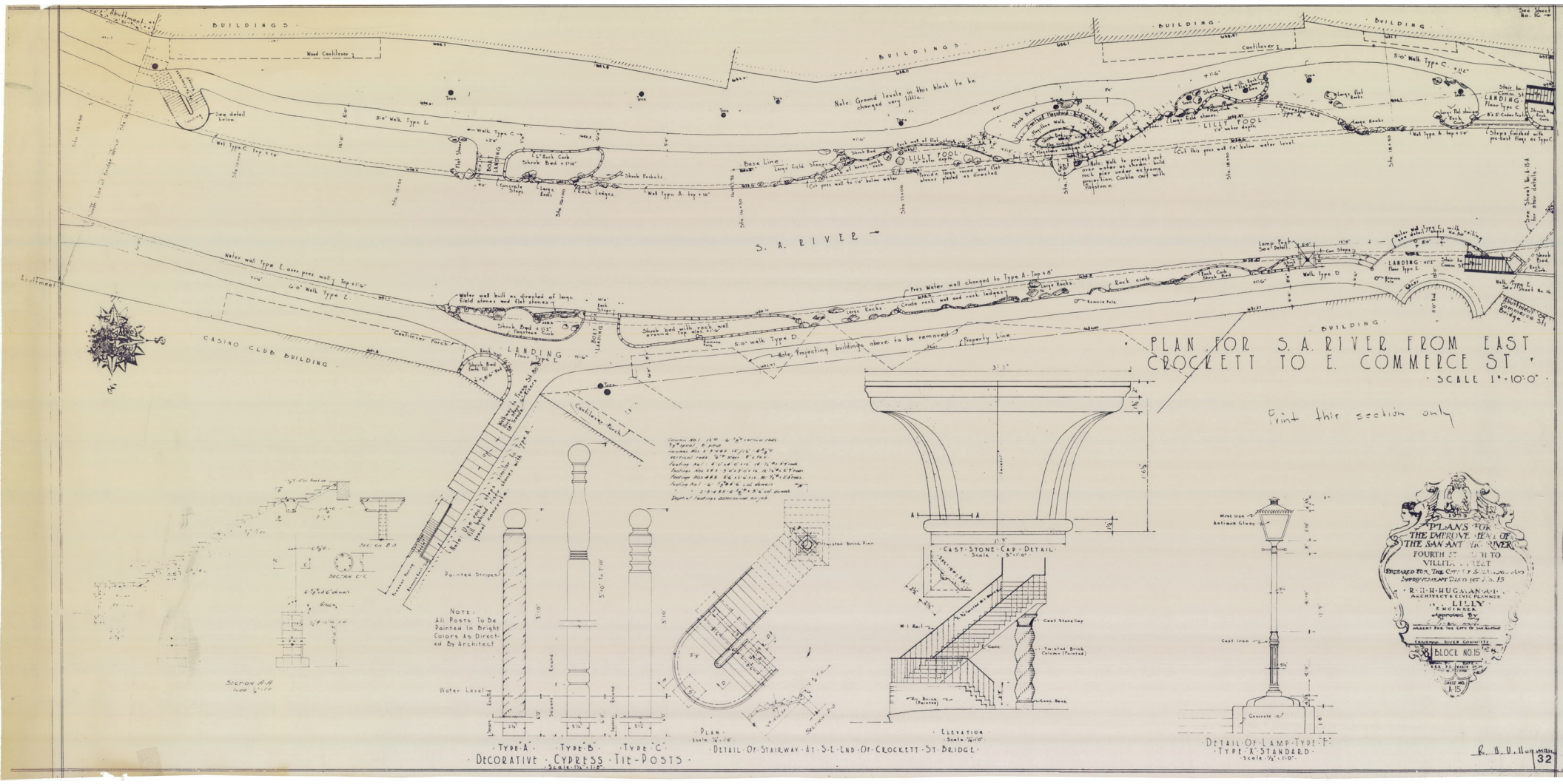

PLAN FOR S. A. RIVER FROM EAST CROCKETT TO E. COMMERCE ST.

SCALE 1" = 10'-0"

Print this section only

CAST-STONE-CAP-DETAIL
Scale 3" = 1'-0"

TYPE "A" TYPE "B" TYPE "C"

DECORATIVE CYPRESS TIE-POSTS
Scale 1 1/2" = 1'-0"

PLAN
Scale 1/4" = 1'0"

ELEVATION
Scale 1/4" = 1'-0"

DETAIL OF STAIRWAY AT S. E. END OF CROCKETT ST BRIDGE

DETAIL OF LAMP TYPE "F"
TYPE "X" STANDARD
Scale 1/2" = 1'-0"

1939
PLANS FOR
THE IMPROVEMENT OF
THE SAN ANTONIO RIVER
FOURTH ST SOUTH TO
VILLITA STREET
PREPARED FOR THE CITY OF SAN ANTONIO AND
IMPROVEMENT DISTRICT No. 15

R. H. H. HUGMAN A. I. A.
ARCHITECT & CIVIC PLANNER
LILLY
ENGINEER
Approved By
AGENT FOR THE CITY OF SAN ANTONIO
CHAIRMAN RIVER COMMITTE
8 BLOCK NO. 15
R.H.H. F.C. MARCH 29, 39
SHEET NO. A-15

R. H. H. Hugman

32

Project Description: Republic of Texas Awning Replacement

Project Name: Republic of Texas Awning Replacement
Submittal: Final Design Approval
Address: 526 Riverwalk St., San Antonio, Texas 78205
Zoning – RIO-3
Applicant – JOSEPH M. SMITH, ARCHITECT **JMS I** ARCHITECTS
Riverwalk Property Owner – City of San Antonio
Lesse-Republic of Texas Restaurant

Final Approval of the Republic of Texas Awning Replacement Project that received conceptual Approval on 09.15.2021
The following revisions have been made per HDRC review discussion comments:
Paving demolition area has been reduced. Finish to match adjacent existing exposed aggregate finish. Tile patterns on the western section are to be complimented by additional score lines.
Additional architectural detail added to column supports.
Structural drawings included in submittal. Steel member framing sizes as well as footing requirements have been reduced.
The following are an overall description of the project that was previously submitted. Revisions are ***italicized****:*

Description of the Project –
Located on the Paseo Del Rio, the Republic of Texas awnings have provided for an iconic "Texas" imagery on a highly visible stretch of the River for over three decades. Although iconic, the current awnings do little to add to the patron experience. The awnings provide minimal shade and with the numerous columns that impede the dining patrons, staff, and pedestrians. The scope of the proposed work is to replace the awnings with a streamlined structure that maximizes the covered areas and de-clutters the footprint and provides a more unencumbered connection to the river.

Design Goals-
Maintain the Iconic "Texas" flag imagery
Re-use the existing seating areas. To include the re-use of the existing wood and metal tables, and metal chairs
Maintain the existing Lease area seating area and maintain the existing pedestrian right of way which separates the seating area from the Republic of Texas restaurant
Provide for a better patron dining experience-
    Increased shade

Increased protection of the table and chair areas
Enhanced lighting
Addition of an integrated strip heater system
Addition of an integrated misting fans

Demolition Work-

Remove the existing awnings and corresponding structure. The columns are bolted to the existing flatwork and river retaining wall. Removal will have little to no impact on the existing surfaces.

Removal of the existing non-descript blue colored rectangular tubing that runs along the river stone retaining wall. Removal will have little to no impact on the existing surfaces. Note- the more significant round bollard and round tubing at the existing curved section of seating are to remain.

Removal of the existing flatwork in the existing seating area to make way for a new support footing for the new awning structural system. The existing flatwork is non-historic exposed aggregate finish with a mix of textures. One area consists of d'hanis type brick banding. The stone river retaining wall is to remain.

New Work-

A new painted black steel awning structure is proposed with columns located adjacent to the river retaining wall and cantilevering out to cover the Dining area. The height of the structure is 2'-0" taller than the existing structure to provide for patron enhancements which are to include:

Integrated LED lighting integrated into the web of the awning structures
Item(s) deleted- Electric flat panel heaters located in the soffit midway between each support beam
Oscillating misting fans attached to the columns
Special care to be taken to integrate the electrical conduit

New sloped "Texas" awning material roof panels to be stepped to maintain the feel of the existing awning fabric shades

New painted black steel river barrier fencing to replicate horse hitching posts, continuing the theming of the restaurant

New concrete ***exposed aggregate finish concrete paving at seating area to match existing flatwork***

Approvals-

The area of improvement is located within a Lease area- Please find attached a letter from Laura Raffaniello, Contract coordinator, CoSA granting permission to pursue HDRC approval for this project.

(Please note, the attached drawings have been enhanced for the HDRC submittal)

JMS I ARCHITECTS

By:

Joseph M. Smith, v.President
JMS I ARCHITECTS

Current site conditions

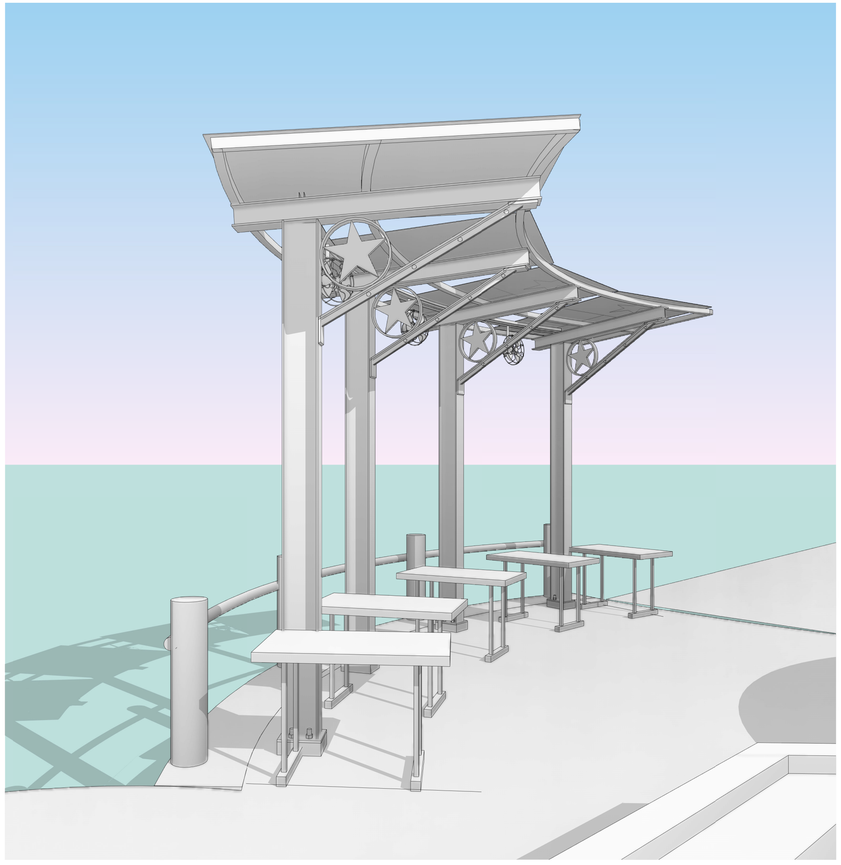

2 3D View 2

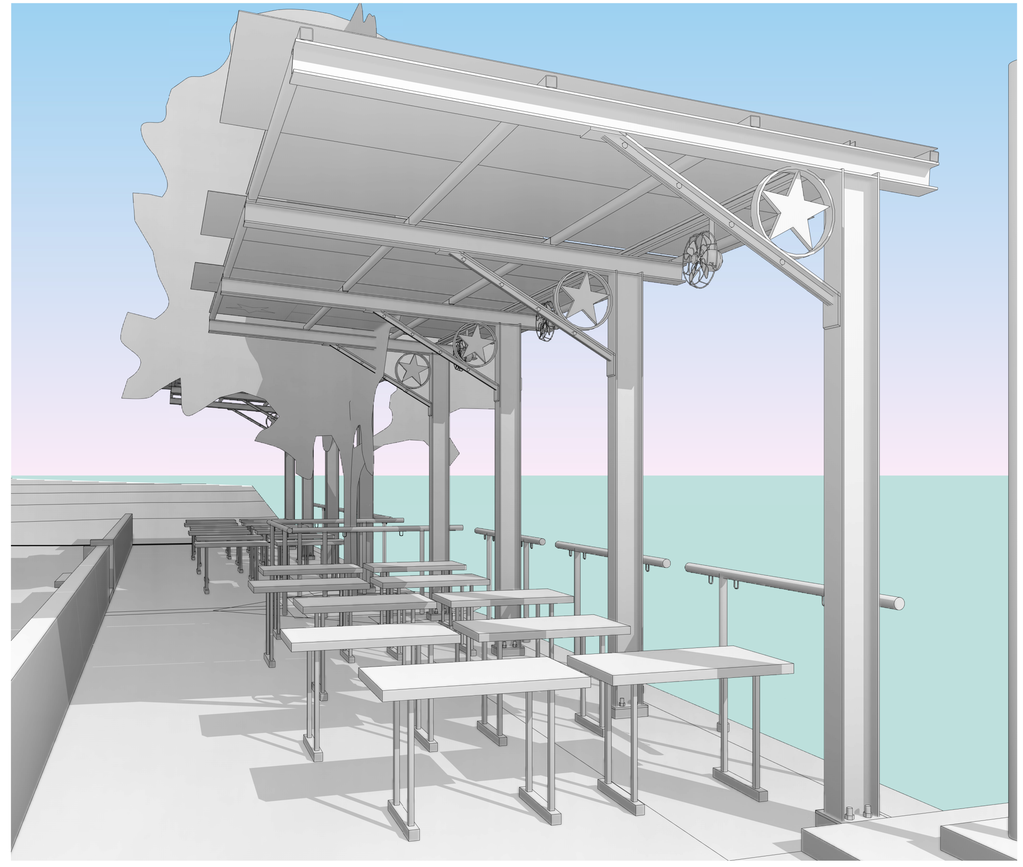

1 3D View 1

ARCHITECTURAL DRAWINGS

STRUCTURAL DRAWINGS BY OTHERS

SSE SPAULDING STRUCTURAL ENGINEERING

JMS ARCHITECTS
7213 N ST MARY'S
SAN ANTONIO, TEXAS 78212
V 210.736.2206 E. jim@jmsarchitects.com
www.jmsarchitects.com

EXPIRES: 12.30.22

These drawings are incomplete. Not to be used for permit and/or construction. For coordination and review only.
Joseph M. Smith
Tx. Reg.#15214

THE REPUBLIC OF TEXAS

526 River Walk St, San Antonio, TX 78205

JMS PROJECT #2620

ISSUE DATES:
10/11/2021
12/16/2021
12/17/2021
12/20/2021
12/28/2021
HDRC FINAL SUBMITTAL:
01/03/2022

SHEET TITLE:
COVER SHEET

SHEET NO.
A0.0

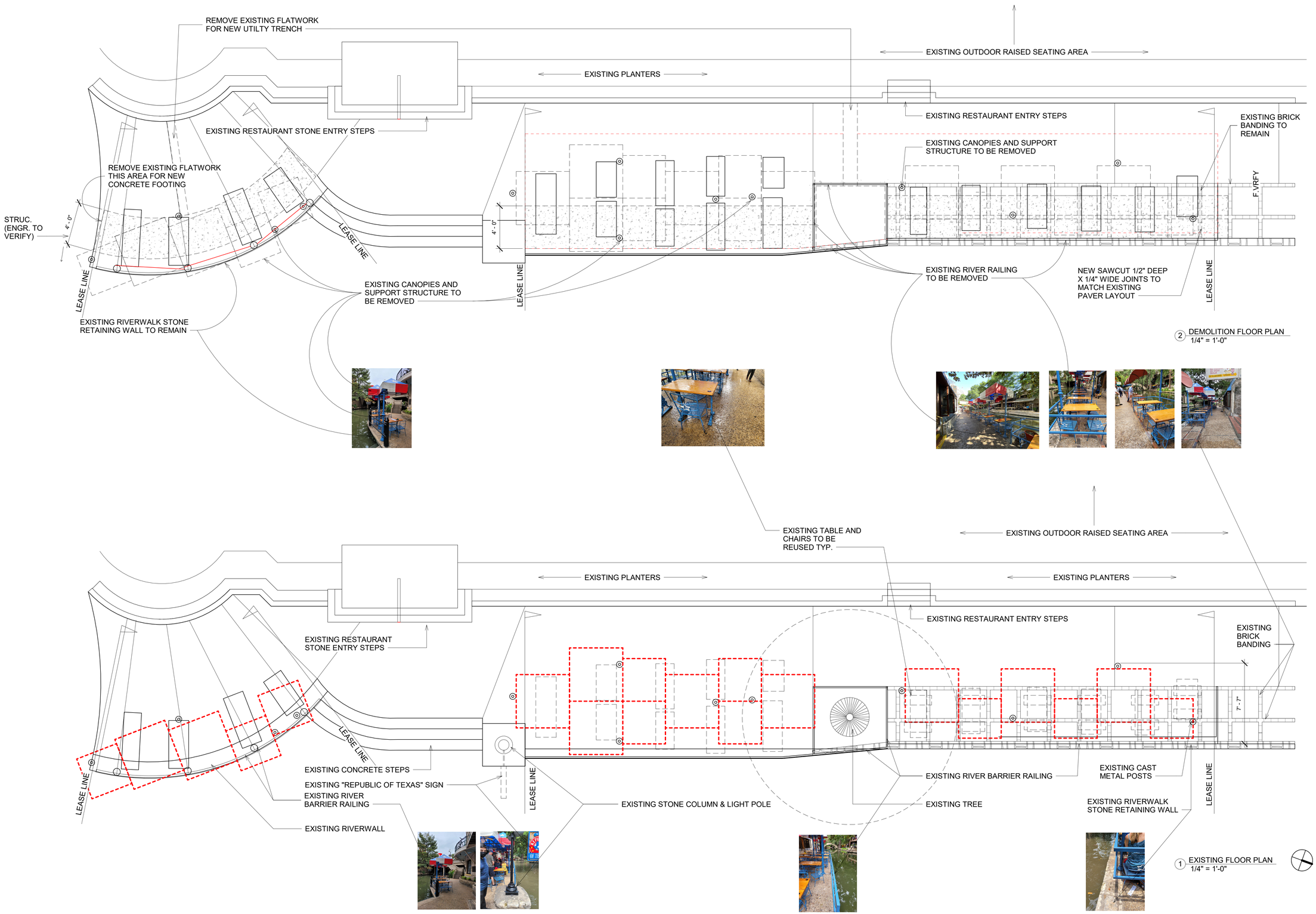

JS ARCHITECTS
7213 NAT MARYS
SAN ANTONIO, TEXAS 78212
V. 210.738.2208 E. jim@jmsarchitects.com
www.jmsarchitects.com

EXPIRES: 12.30.22

These drawings are incomplete. Not to be used for permit and/or construction. For coordination and review only.
Joseph M. Smith
Tx. Reg.#15214

THE REPUBLIC OF TEXAS

526 River Walk St, San Antonio, TX 78205

JMS PROJECT #2620

ISSUE DATES:
10/11/2021
12/16/2021
12/17/2021
12/20/2021
12/28/2021
HDRC FINAL SUBMITTAL:
01/03/2022

SHEET TITLE: EXISTING FLOOR PLAN

SHEET NO. EX.1.0

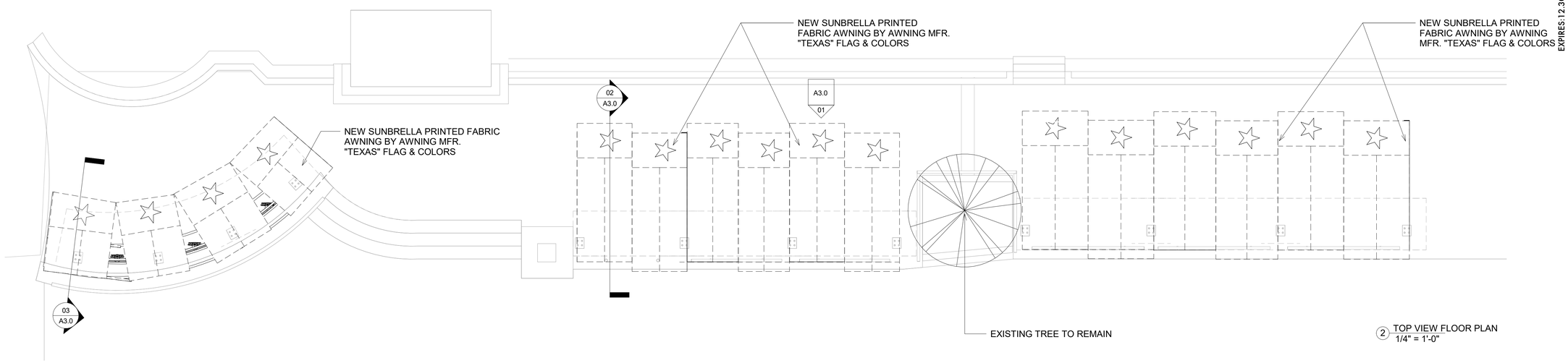

2 TOP VIEW FLOOR PLAN
1/4" = 1'-0"

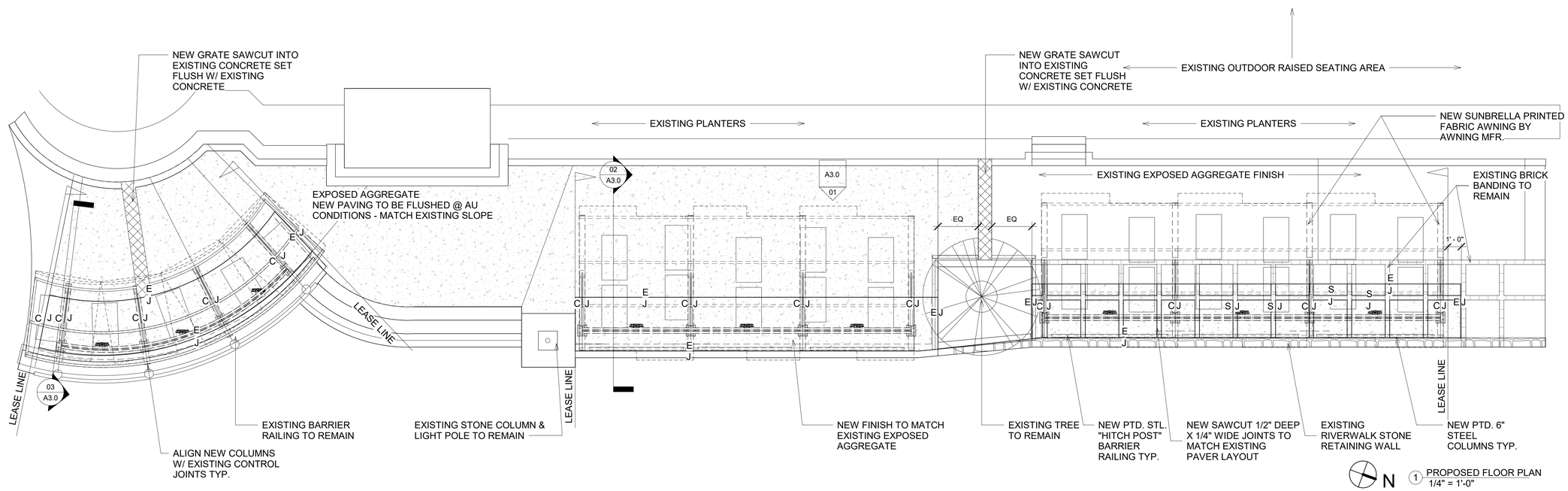

1 PROPOSED FLOOR PLAN
1/4" = 1'-0"

JS ARCHITECTS
7213 NEFF MARYS
SAN ANTONIO, TEXAS 78212
V. 210.738.2208 E. jim@jmsarchitects.com
www.jmsarchitects.com

EXPIRES: 12.30.22

These drawings are incomplete. Not to be used for permit and/or construction. For coordination and review only.
Joseph M. Smith
Tx. Reg.#15214

THE REPUBLIC OF TEXAS

526 River Walk St, San Antonio, TX 78205

JMS PROJECT #2620

ISSUE DATES:
10/11/2021
12/16/2021
12/17/2021
12/20/2021
12/28/2021
HDRC FINAL SUBMITTAL:
01/03/2022

SHEET TITLE: PLANS

SHEET NO. A1.0

8" WIDE BLACK SOLID TRENCH DRAIN COVER

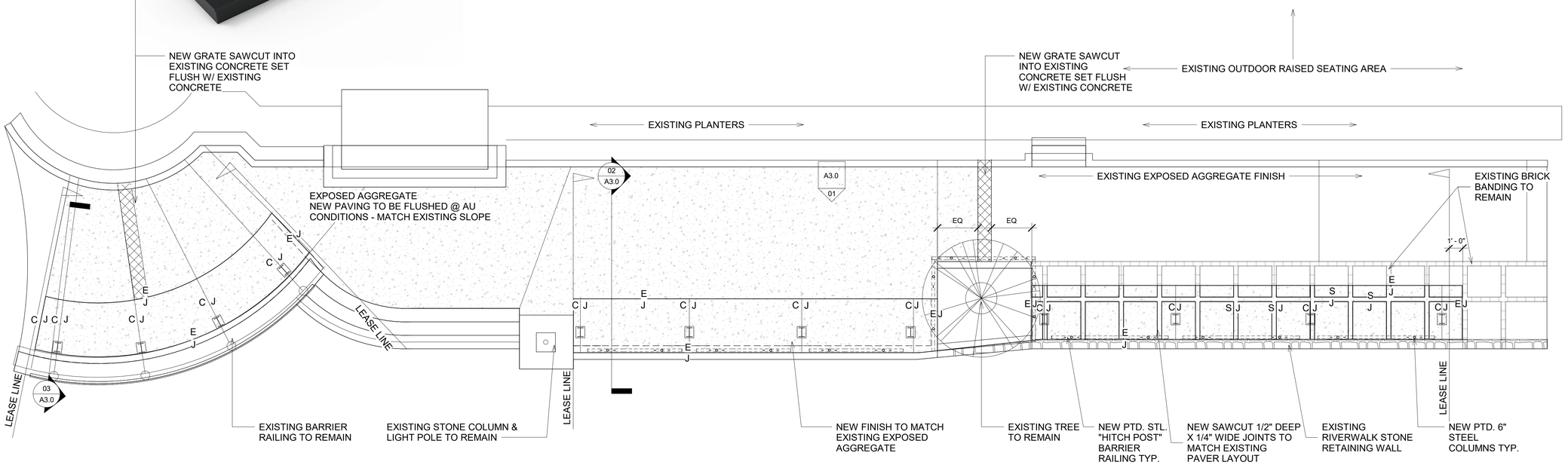

N

1 PAVING PLAN
1/4" = 1'-0"

JS ARCHITECTS
7213 NEFF MARYS
SAN ANTONIO, TEXAS 78212
V. 210.738.2208 E. jsmith@jsmarchitects.com
www.jsmarchitects.com

EXPIRES: 12.30.22

These drawings are incomplete. Not to be used for permit and/or construction. For coordination and review only.
Joseph M. Smith
Tx. Reg.#15214

THE REPUBLIC OF TEXAS

526 River Walk St, San Antonio, TX 78205

JMS PROJECT #2620

ISSUE DATES:
10/11/2021
12/16/2021
12/17/2021
12/20/2021
12/28/2021
HDRC FINAL SUBMITTAL:
01/03/2022

SHEET TITLE: PAVING PLAN

SHEET NO. A1.0A

18" BLACK MISTING FAN WITH BOOSTER PUMP

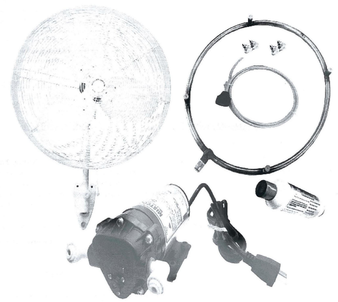

Booster Pump Specifications:

- Maximum Inlet Pressure: 100 PSI Minimum Inlet Pressure:
- Self-priming (Capable of lifting water from 6 feet below.)
- Maximum Outlet Pressure: 200 PSI (depends on line length and numbers of nozzles)
- Maximum Flow: 0.5 GPM
- Noise Level: appx. 35 DB
- Maximum Fluid Temperature: For Room Temperature / Cold Water applications only

18 Inch Outdoor Fan Features:

- Size: 18”
- Color: BLACK
- RPM: 1110, AMPS: 2.65, CFM:9100
- 3-speed Pull chain
- Stainless Steel hardware with Durable Corrosion-resistant finish
- Motor with thermal Overlade protection industrial
- Grade aluminum blade
- 10 Ft Heavy Duty cord with cord wrap
- Quiet operation
- For indoor/ Outdoor Use
- Osha Approved Grill

U SHAPE LED - LIGHTING SET IN STEEL 'W' SECTION FLANGE

Product description

Size:10*2m(6.6ft)

3 Ways to Hold/Fix the LED Aluminum Channel

* By Mounting Clips: Please search for "B077HQPG5Q "(End caps included)
* Pre-drill the base and slightly countersink to get the screws to lay flat
* Use Double Sided Foam Tape: please search for "B074J3X2SJ"

Specifications:

* Configuration: U-Shape
* Max. LED Strip Width: 12mm
* Channel Finish: Anodized Extruded aluminum
* Cover Material: Milky Plastic
* Length: 10*2meter segments (20m total)

Product information

Size:10*2m(6.6ft)

Technical Details

Manufacturer	StarlandLed
Part Number	AP03U-3M
Item Weight	5.49 pounds
Package Dimensions	81 x 3 x 3 inches
Is Discontinued By Manufacturer	No
Size	10*2m(6.6ft)
Color	Silver
Style	10-Pack U-Shape 2m/6.6ft segment
Material	Aluminum
Shape	Linear
Power Source	AC/DC
Voltage	0.01 Volts
Item Package Quantity	10
Type of Bulb	LED
Measurement System	English

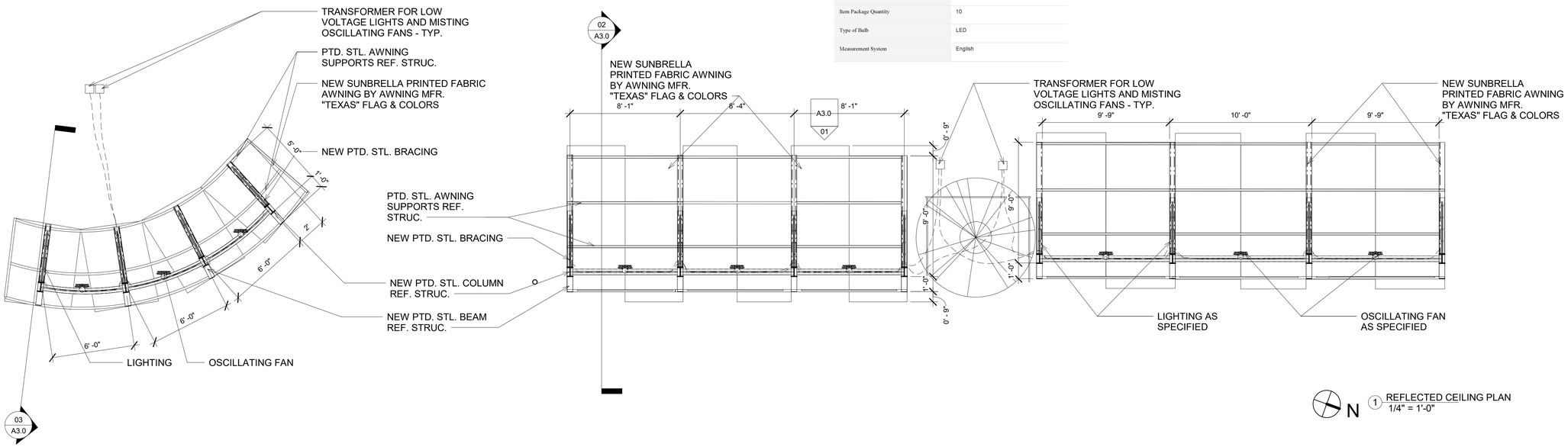

1 REFLECTED CEILING PLAN
1/4" = 1'-0"

JS ARCHITECTS
7213 NEFF MARYS
SAN ANTONIO, TEXAS 78212
V. 210.736.2206 E. jim@jmsarchitects.com
www.jmsarchitects.com

EXPIRES: 12.30.22

These drawings are incomplete. Not to be used for permit and/or construction. For coordination and review only.
Joseph M. Smith
Tx. Reg.#15214

THE REPUBLIC OF TEXAS

526 River Walk St, San Antonio, TX 78205

JMS PROJECT #2620

ISSUE DATES:
10/11/2021
12/16/2021
12/17/2021
12/20/2021
12/28/2021
HDRC FINAL SUBMITTAL:
01/03/2022

SHEET TITLE: REFLECTED CEILING PLAN

SHEET NO. A2.0

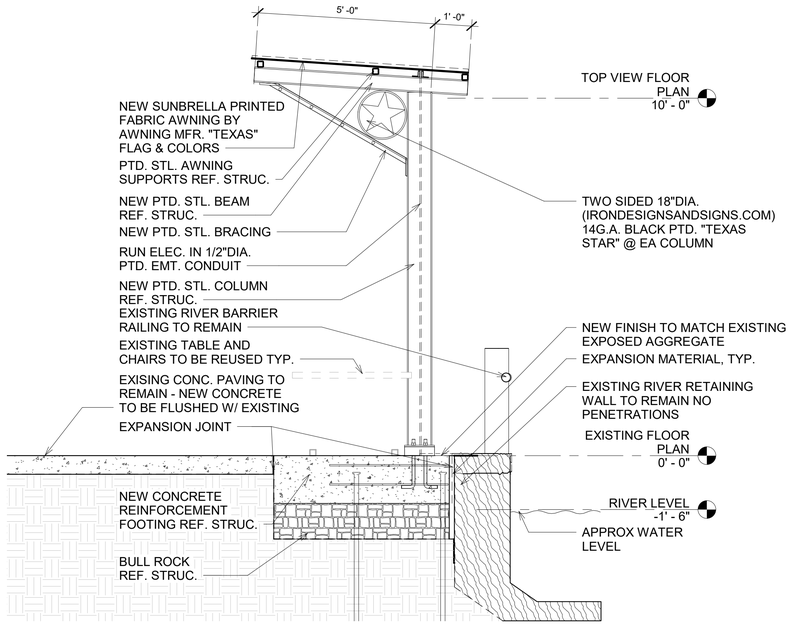

03 Section 2
1/2" = 1'-0"

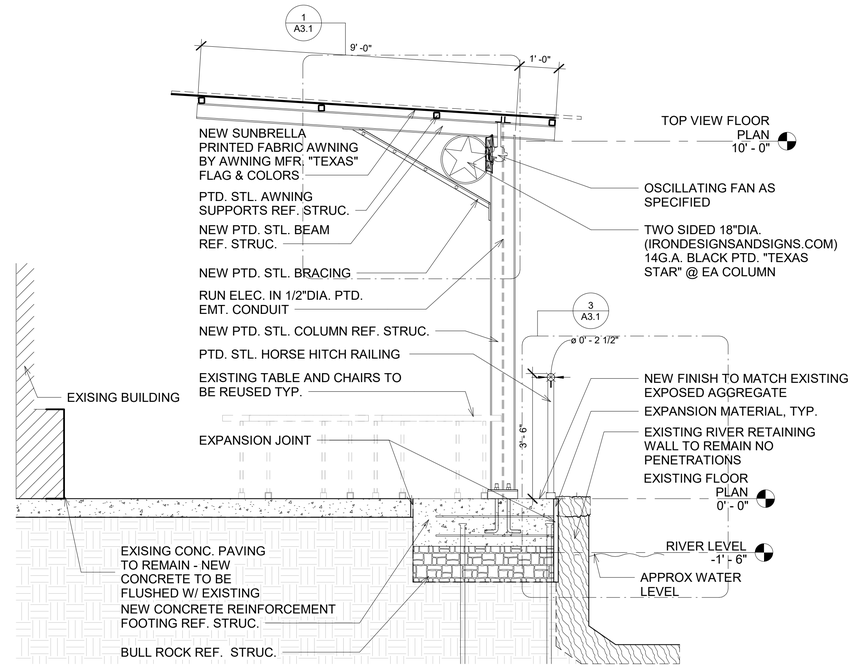

02 Section 1
1/2" = 1'-0"

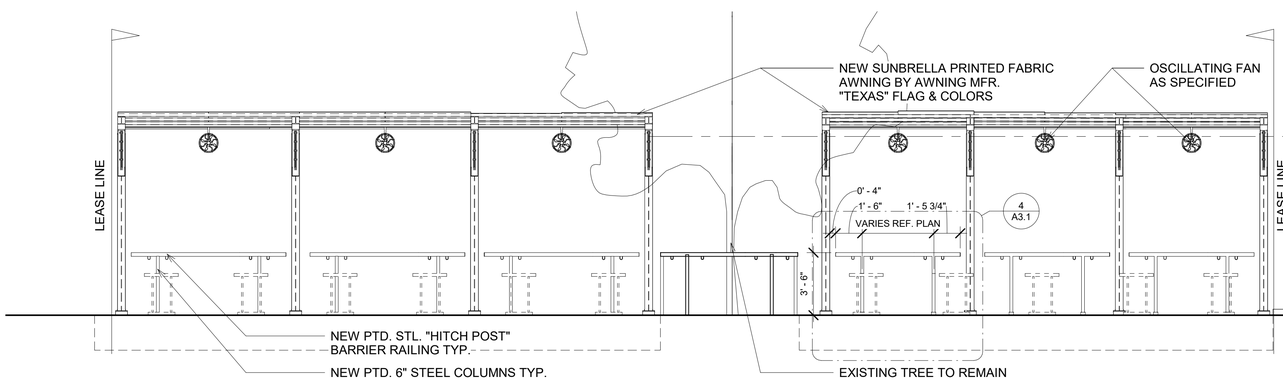

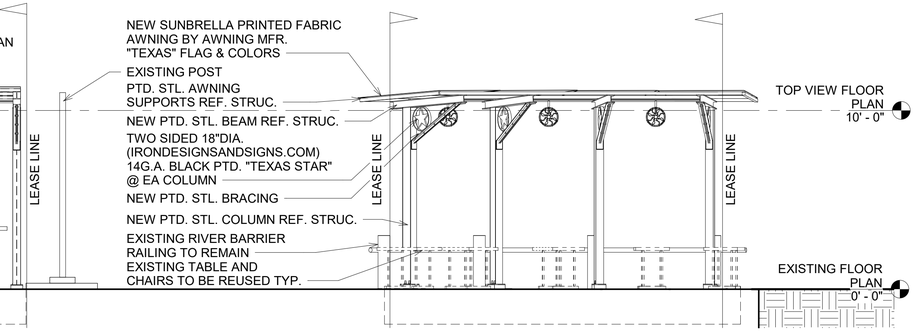

01 FRONT ELEVATION
1/4" = 1'-0"

JS ARCHITECTS
7213 NAT MARYS
SAN ANTONIO, TEXAS 78212
V. 210.736.2206 E. jim@jmsarchitects.com
www.jmsarchitects.com

EXPIRES: 12.30.22

These drawings are incomplete. Not to be used for permit and/or construction. For coordination and review only.
Joseph M. Smith
Tx. Reg.#15214

THE REPUBLIC OF TEXAS

526 River Walk St, San Antonio, TX 78205

JMS PROJECT #2620

ISSUE DATES:
10/11/2021
12/16/2021
12/17/2021
12/20/2021
12/28/2021
HDRC FINAL SUBMITTAL:
01/03/2022

SHEET TITLE: SECTIONS & ELEVATION

SHEET NO. A3.0

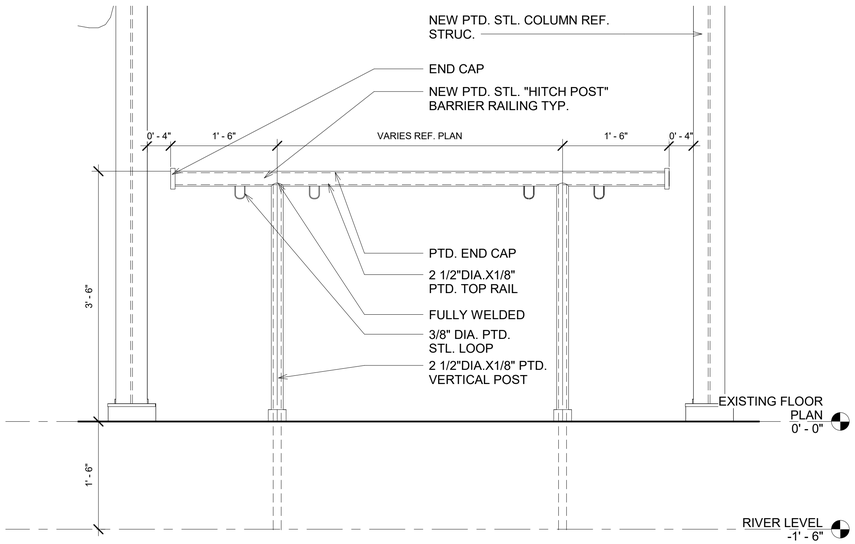

4 RAILING ELEVATION
1" = 1'-0"

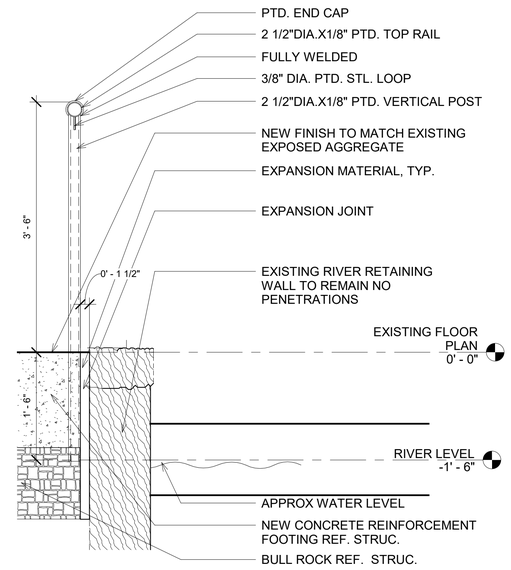

3 RAILING DETAIL
1" = 1'-0"

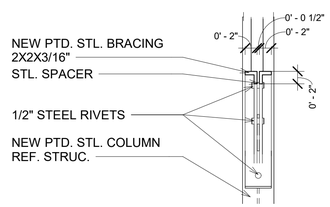

2 STL. BRACING DETAIL.-B
1" = 1'-0"

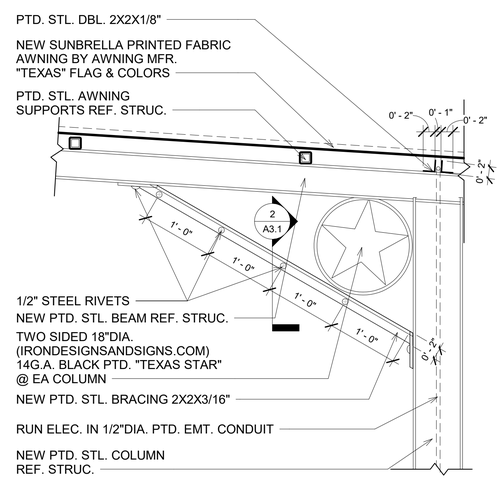

1 STL. BRACING DETAIL.-A
1" = 1'-0"

7213 NEST MARYS
SAN ANTONIO, TEXAS 78212
V. 210.736.2206 E. jsmith@jmsarchitects.com
JS ARCHITECTS www.jmsarchitects.com

EXPIRES: 12.30.22

These drawings are incomplete. Not to be used for permit and/or construction. For coordination and review only.
Joseph M. Smith
Tx. Reg.#15214

THE REPUBLIC OF TEXAS

526 River Walk St, San Antonio, TX 78205

JMS PROJECT #2620

ISSUE DATES:
10/11/2021
12/16/2021
12/17/2021
12/20/2021
12/28/2021
HDRC FINAL SUBMITTAL:
01/03/2022

SHEET TITLE:
SECTIONS & ELEVATION

SHEET NO.
A3.1

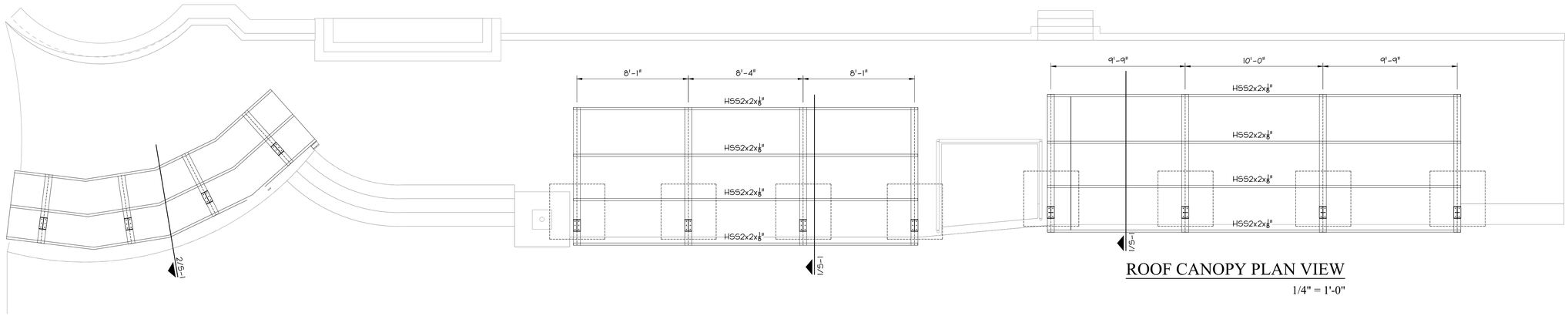

ROOF CANOPY PLAN VIEW

1/4" = 1'-0"

FOUNDATION NOTES

A. GENERAL
1. THE STEEL REINFORCED CONCRETE FOOTINGS HAVE BEEN DESIGNED USING GEOTECHNICAL INFORMATION PROVIDED BY:

BURGE ENGINEERING & ASSOCIATES
REPORT NO. 12-21-0210
DATED: 09/01/2021

2. IT IS THE RESPONSIBILITY OF THE BUILDER AND CONCRETE CONTRACTOR TO VERIFY ALL DIMENSIONS, DROPS, BLOCK OUT LOCATIONS, ETC. WITH THE ARCHITECTURAL PLANS.
3. A PRE-POUR INSPECTION MUST BE PERFORMED ON THE FOOTINGS A MAXIMUM OF ONE DAY BEFORE PLACEMENT OF CONCRETE. PERMISSION MUST BE GIVEN BY THE ENGINEER OR HIS REPRESENTATIVE PRIOR TO PLACEMENT OF CONCRETE.

B. CONCRETE
1. CONCRETE SHALL BE MINIMUM 3000 PSI AT 28 DAYS.
2. CONCRETE SLUMP: 5"

C. SUBGRADE PREPARATION
1. EXISTING SOIL MUST BE EXCAVATED TO A DEPTH THAT WILL ALLOW FOR THE PLACEMENT OF A MINIMUM OF 12' OF 3"-4" BULL ROCK UNDER THE CONCRETE FOOTINGS.

D.REINFORCEMENT
1. REINFORCEMENT: ASTM A-615, GRADE 60, UNLESS NOTED OTHERWISE.
2. STIRRUPS AND TIES: ASTM A-615, GRADE 40, UNLESS NOTED OTHERWISE.
3. ALL REINFORCEMENTS SHALL BE DESIGNED AND DETAILED IN ACCORDANCE WITH THE ACI "MANUAL OF STANDARD PRACTICES FOR DETAILING CONCRETE STRUCTURES" (ACI 315, LATEST ADDITION).
4. ALL LAPS AND SPLICES SHALL BE A MINIMUM OF 40 BAR DIAMETERS.
5. CONCRETE IN CONTACT WITH SOIL SHALL HAVE A MINIMUM REINFORCEMENT COVER OF 3-INCHES. CONCRETE EXPOSED TO AIR SHALL HAVE A MINIMUM COVER OF 1 1/2-INCHES.

E. HELICAL PIERS
1. HELICAL PIERS ARE TO BE INSTALLED IN LOCATIONS SHOWN. THE PIERS MUST HAVE A MINIMUM BEARING CAPACITY OF 15 KIPS EACH. IF THE CAPACITY OF THE HELICAL PIERS IS LESS THAN 15 KIPS, ADDITIONAL PIERS WILL HAVE TO BE INSTALLED. CONTACT ENGINEER FOR LOCATION OF ADDED HELICAL PIERS.
2. HELICAL PIERS MUST BEAR AT LEAST 15-FEET BELOW BOTTOM OF CONCRETE FOOTING.
3. PRODUCT LITERATURE WITH PIER CAPACITIES MUST BE SUBMITTED TO ENGINEER PRIOR TO PIER INSTALLATION.

STEEL NOTES:

1. WIDE FLANGE BEAMS TO BE MINIMUM ASTM A992
2. TUBE STEEL TO BE ASTM A500 GR. B.
3. ALL ANGLE TO BE ASTM A36.
4. STEEL PLATE TO BE ASTM A36, ASTM A570 OR ASTM A572.
5. WELDING RODS TO BE E70XX.
6. INSTALL NELSON STUDS PER MANUFACTURERS SPECIFICATIONS.
8. ROOF MATERIAL: FABRIC PER ARCH.
9. COLUMN ANCHOR BOLTS TO BE $\frac{3}{4}$"x18" F1554 GRADE 55. USE A563 NUTS AND F436 WASHERS.

DESIGN LOADS:

ROOF LIVE LOAD- 5 PSF
NOT REDUCED
ROOF DEAD LOAD- 10 PSF
WIND SPEED- 115 MPH
EXP. B

EARTHQUAKE DESIGN DATA:
IMPORTANCE FACTOR 1
SITE CLASS A
SEISMIC USE GROUP 1
SEISMIC DESIGN CAT. A

GOVERNING CODE: 2018 IBC

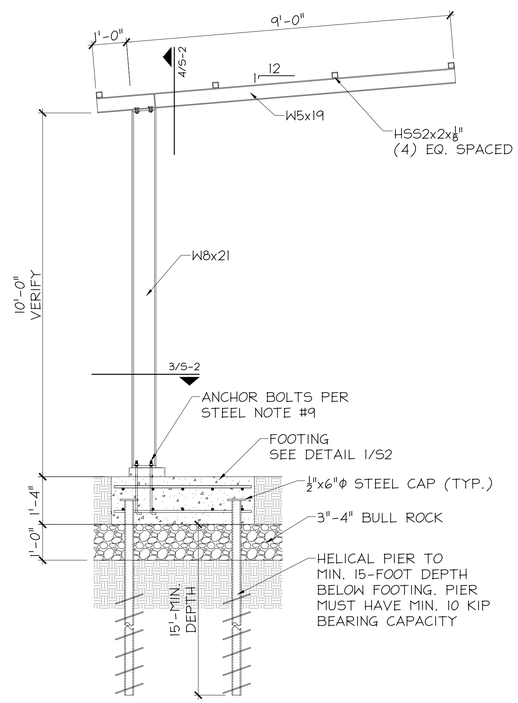

DETAIL 1

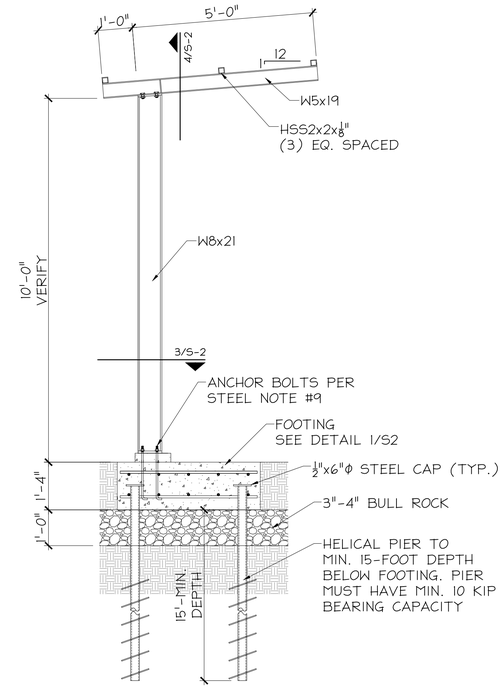

DETAIL 2

Spaulding Structural Engineering
12227 Huebner, Ste. 106 San Antonio, Texas
Phone 210-451-7756 REG. #F-10775

THE REPUBLIC OF TEXAS
526 RIVERWALK STREET
SAN ANTONIO, TEXAS

STRUCTURAL PLAN

DRAWN BY:	CLS
DATE:	12/15/2021
SCALE:	1/4"= 1'

S1

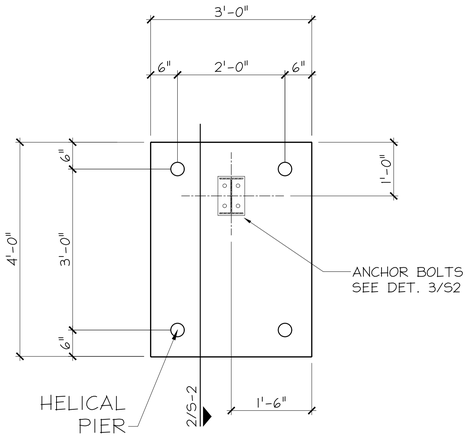

DETAIL 1

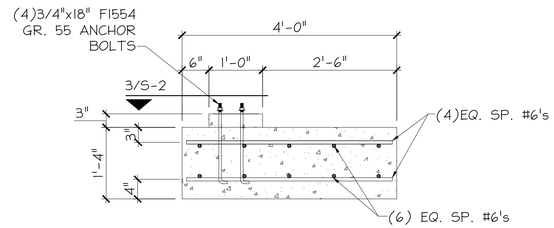

DETAIL 2

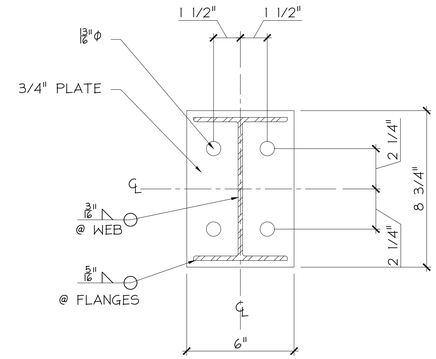

DETAIL 3

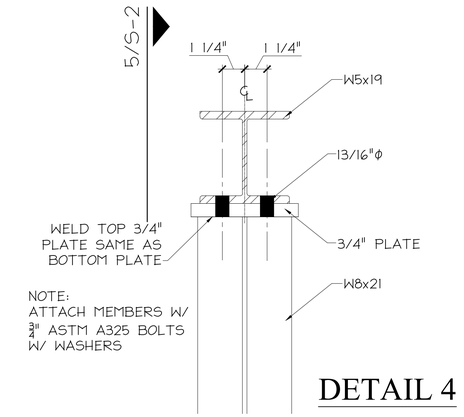

DETAIL 4

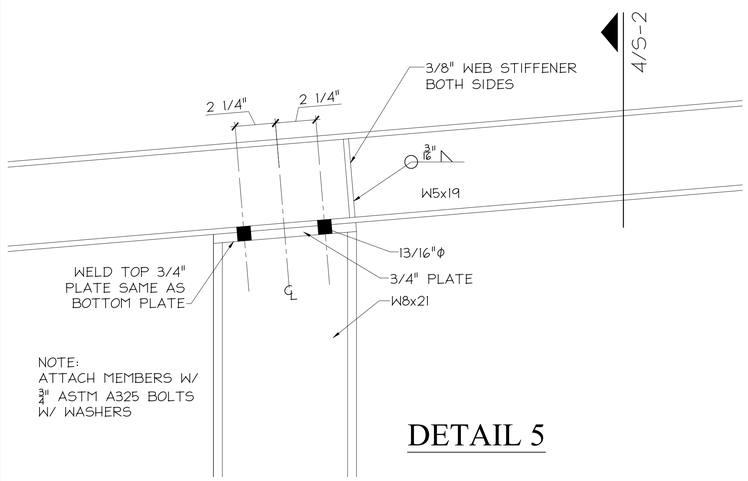

DETAIL 5

Spaulding Structural Engineering
12227 Huebner, Ste. 106 San Antonio, Texas
Phone 210-451-7756 REG. #F-10775

THE REPUBLIC OF TEXAS
526 RIVERWALK STREET
SAN ANTONIO, TEXAS

STRUCTURAL PLAN

DRAWN BY:	CLS
DATE:	12/15/2021
SCALE:	1/4"= 1'

S2